LMS10D

COMPONENTS:

1 Rotating contact surface
1a Rotating contact surface
2 Stationary contact surface
2a Stationary contact surface
3 O-rings
3a O-rings
3b O-rings
3c O-rings
4 Springs
5 Metal frame
5a Set screws
5b Ring

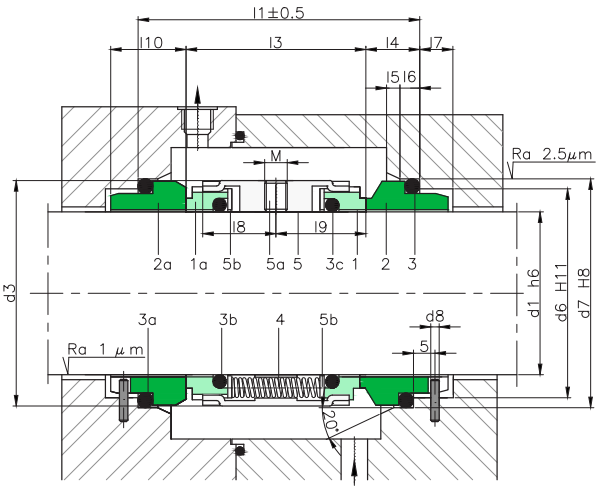

SECTORS:

CHARACTERISTICS:

- Unbalanced.
- System attached to the shaft by allen screws.
- Not dependent on the rotation direction.

OPERATING LIMITS:

d_1= 18 ÷ 100 mm p= 16 kg/cm²

v= 20 m/s t= -15÷ +200ºC (*)

(*) The temperature resistance depends on the material of the secondary seals used.

The operating limits are defined by the PV factor which is determined for the sealing system characteristics and those of the application.

DESCRIPTION:

Double seal for working with barrier fluids in which the springs are isolated from the fluid product.
API 53A and API54 assemblies.
Recommended in applications with toxic, pollutant or potentially dangerous products in which safety is an important factor. Available with a pumping ring on the casing to reduce the temperature between the contact surfaces and facilitate the barrier fluid movement (reference LMS10-F). Available in a balanced version with a stepped shaft (reference LM10DB).
Contact surface kits available.

DIMENSIONS CHART

Dimensions in mm

Shaft	Rotary part					Stationary part								Total length
mm	d_3	l_3	l_8	l_9	M	d_6	d_7	d_8	l_4	l_5	l_6	l_7	l_{10}	l_1
18	33	38	17.0	19.0	M5	27	33	3	11.5	2.0	5	9	19.5	61.0
20	35	38	17.0	19.0	M5	29	35	3	11.5	2.0	5	9	19.5	61.0
22	37	38	17.0	19.0	M5	31	37	3	11.5	2.0	5	9	19.5	61.0
24	39	38	17.0	19.0	M5	33	39	3	11.5	2.0	5	9	19.5	61.0
25	40	38	17.0	19.0	M5	34	40	3	11.5	2.0	5	9	19.5	61.0
28	43	39	17.5	19.5	M6	37	43	3	11.5	2.0	5	9	19.5	62.0
30	45	39	17.5	19.5	M6	39	45	3	11.5	2.0	5	9	19.5	62.0
32	47	39	17.5	19.5	M6	42	48	3	11.5	2.0	5	9	19.5	62.0
33	48	39	17.5	19.5	M6	42	48	3	11.5	2.0	5	9	19.5	62.0
35	50	39	17.5	19.5	M6	44	50	3	11.5	2.0	5	9	19.5	62.0
38	55	41	18.5	20.5	M6	49	56	4	14.0	2.0	6	9	22.0	69.0
40	57	42	19.0	21.0	M6	51	58	4	14.0	2.0	6	9	22.0	70.0
43	60	42	19.0	21.0	M6	54	61	4	14.0	2.0	6	9	22.0	70.0
45	62	42	19.0	21.0	M6	56	63	4	14.0	2.0	6	9	22.0	70.0
48	65	42	19.0	21.0	M6	59	66	4	14.0	2.0	6	9	22.0	70.0
50	67	43	19.5	21.5	M6	62	70	4	15.0	2.5	6	9	23.0	73.0
53	70	43	19.5	21.5	M6	65	73	4	15.0	2.5	6	9	23.0	73.0
55	72	43	19.5	21.5	M8	67	75	4	15.0	2.5	6	9	23.0	73.0
58	79	56	23.5	28.0	M8	70	78	4	15.0	2.5	6	9	23.0	86.0
60	81	56	23.5	28.0	M8	72	80	4	15.0	2.5	6	9	23.0	86.0
63	84	55	24.5	27.5	M8	75	83	4	15.0	2.5	6	9	-	85.0
65	86	55	24.5	27.5	M8	77	85	4	15.0	2.5	6	9	23.0	85.0
68	89	55	24.5	27.5	M8	81	90	4	18.0	2.5	7	9	26.0	91.0
70	91	56	23.5	28.0	M8	83	92	4	18.0	2.5	7	9	26.0	92.0
75	99	56	25.5	28.0	M8	88	97	4	18.0	2.5	7	9	26.0	92.0
80	104	56	25.5	28.0	M8	95	105	4	18.2	3.0	7	9	26.2	92.5
85	100	56	25.0	28.0	M8	100	110	4	18.2	3.0	7	9	26.2	92.5
90	114	56	25.5	28.0	M8	105	115	4	18.2	3.0	7	9	26.2	92.5
95	119	56	25.0	28.0	M8	110	120	4	17.2	3.0	7	9	25.2	90.5
100	124	56	25.0	28.0	M8	115	125	4	17.2	3.0	7	9	25.2	90.5

Dimensions subject to changes or modifications.

LMS11

COMPONENTS:

1 Rotating contact surface
2 Stationary contact surface
3 O-rings
3a O-rings
4 Springs
5 Metal frame
5a Set screws
5b Ring

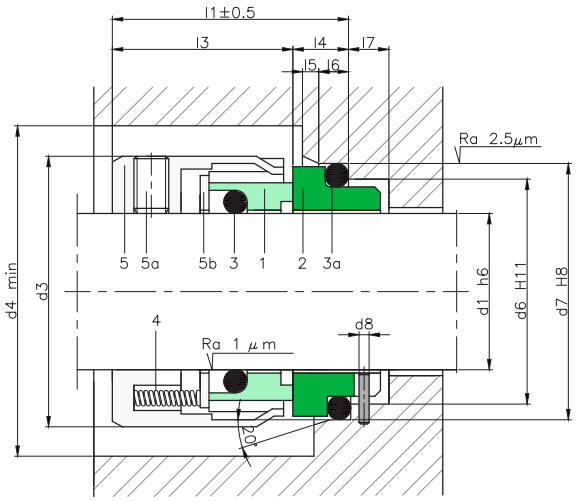

SECTORS:

CHARACTERISTICS:

- Unbalanced.
- System attached to the shaft by allen screws.
- Not dependent on the rotation direction.

OPERATING LIMITS:

d_1= 18 ÷ 100 mm p= 10 kg/cm²

v= 20 m/s t= -15÷ +200ºC (*)

(*) The temperature resistance depends on the material of the secondary seals used.

The operating limits are defined by the PV factor which is determined for the sealing system characteristics and those of the application.

DESCRIPTION:

The contact surface of the rotating part can be detached, which makes this model extremely versatile as it is easy to exchange contact surfaces made of different materials.
Seal compliant with standard EN 12756.

DIMENSIONS CHART

Dimensions in mm

Shaft	Rotary part			Stationary part							Total length
mm	d_3	d_4	l_3	d_6	d_7	d_8	l_4	l_5	l_6	l_7	l_1
18	32	37	21.0	27	33	3	10.0	2.0	4	9	31
20	34	39	21.0	29	35	3	10.0	2.0	5	9	31
22	36	41	21.0	31	37	3	10.0	2.0	5	9	31
24	38	43	24.0	33	39	3	10.0	2.0	5	9	34
25	39	44	24.0	34	40	3	10.0	2.0	5	9	34
28	42	47	24.0	37	43	3	10.0	2.0	5	9	34
30	44	49	25.0	39	45	3	10.0	2.0	5	9	35
32	46	51	25.0	42	48	3	10.0	2.0	5	9	35
33	47	52	25.0	42	48	3	10.0	2.0	5	9	35
35	49	54	25.0	44	50	3	10.0	2.0	5	9	35
38	54	59	28.0	49	56	4	11.0	2.0	6	9	39
40	56	61	28.0	51	58	4	11.0	2.0	6	9	39
43	59	64	28.0	54	61	4	11.0	2.0	6	9	39
45	61	66	28.0	56	63	4	11.0	2.0	6	9	39
48	64	69	28.0	59	66	4	11.0	2.0	6	9	39
50	66	71	28.0	62	70	4	13.0	2.5	6	9	41
53	69	74	28.0	65	73	4	13.0	2.5	6	9	41
55	71	76	28.0	67	75	4	13.0	2.5	6	9	41
58	78	83	29.0	70	78	4	13.0	2.5	6	9	42
60	80	85	29.0	72	80	4	13.0	2.5	6	9	42
63	83	88	32.0	75	83	4	13.0	2.5	6	9	45
65	85	90	32.0	77	85	4	13.0	2.5	6	9	45
68	88	93	32.7	81	90	4	15.3	2.5	7	9	48
70	90	95	32.7	83	92	4	15.3	2.5	7	9	48
75	99	104	36.7	88	97	4	15.3	2.5	7	9	52
80	104	109	36.3	95	105	4	15.7	3.0	7	9	52
85	109	114	36.3	100	110	4	15.7	3.0	7	9	52
90	114	119	39.3	105	115	4	15.7	3.0	7	9	55
95	119	124	39.3	110	120	4	15.7	3.0	7	9	55
100	124	129	39.3	115	125	4	15.7	3.0	7	9	55

Dimensions subject to changes or modifications.

LMS13

COMPONENTS:

1 Rotating contact surface
2 Stationary contact surface
3 O-rings
3a O-rings
4 Springs
5 Metal frame
5a Set screws
5b Ring

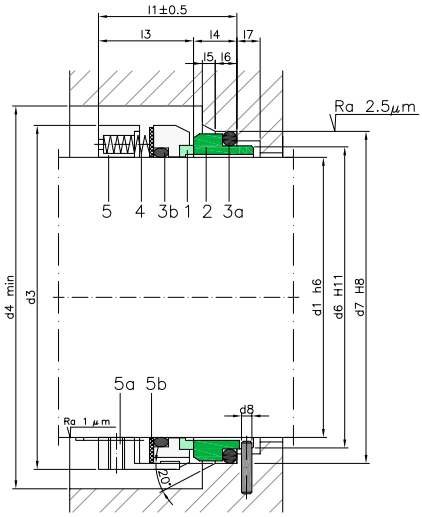

SECTORS:

CHARACTERISTICS:

- Unbalanced.
- System attached to the shaft by allen screws.
- Not dependent on the rotation direction.

OPERATING LIMITS:

d_1= 20 ÷ 100 mm p= 12 kg/cm²

v= 20 m/s t= -40÷ +200ºC (*)

(*) The temperature resistance depends on the material of the secondary seals used.

The operating limits are defined by the PV factor which is determined for the sealing system characteristics and those of the application.

DESCRIPTION:

The contact surface of the rotating part can be detached, which makes this model extremely versatile as it is easy to exchange contact surfaces made of different materials.
Seal compliant with standard EN 12756.

DIMENSIONS CHART

Dimensions in mm

Shaft	Rotary part			Stationary part							Total length
mm	d_3	d_4	l_3	d_6	d_7	d_8	l_4	l_5	l_6	l_7	l_1
20	34	36	27,5	29,0	35,0	3,0	10,0	2,0	5,0	9,0	37,5
22	36	38	27,5	31,0	37,0	3,0	10,0	2,0	5,0	9,0	37,5
24	38	40	30,0	33,0	39,0	3,0	10,0	2,0	5,0	9,0	40,0
25	39	41	30,0	34,0	40,0	3,0	10,0	2,0	5,0	9,0	40,0
28	42	44	32,5	37,0	43,0	3,0	10,0	2,0	5,0	9,0	42,5
30	44	46	32,5	39,0	45,0	3,0	10,0	2,0	5,0	9,0	42,5
32	46	48	32,5	42,0	48,0	3,0	10,0	2,0	5,0	9,0	42,5
33	47	49	32,5	42,0	48,0	3,0	10,0	2,0	5,0	9,0	42,5
35	49	51	32,5	44,0	50,0	3,0	10,0	2,0	5,0	9,0	42,5
38	54	58	34,0	49,0	56,0	4,0	11,0	2,0	6,0	9,0	45,0
40	56	60	34,0	51,0	58,0	4,0	11,0	2,0	6,0	9,0	45,0
43	59	63	34,0	54,0	61,0	4,0	11,0	2,0	6,0	9,0	45,0
45	61	65	34,0	56,0	63,0	4,0	11,0	2,0	6,0	9,0	45,0
48	64	68	34,0	59,0	66,0	4,0	11,0	2,0	6,0	9,0	45,0
50	66	70	34,5	62,0	70,0	4,0	13,0	2,5	6,0	9,0	47,5
53	69	73	34,5	65,0	73,0	4,0	13,0	2,5	6,0	9,0	47,5
55	71	75	34,5	67,0	75,0	4,0	13,0	2,5	6,0	9,0	47,5
58	78	83	39,5	70,0	78,0	4,0	13,0	2,5	6,0	9,0	52,5
60	80	85	39,5	72,0	80,0	4,0	13,0	2,5	6,0	9,0	52,5
63	83	88	39,5	75,0	83,0	4,0	13,0	2,5	6,0	9,0	52,5
65	85	90	39,5	77,0	85,0	4,0	13,0	2,5	6,0	9,0	52,5
68	88	93	37,5	81,0	90,0	4,0	15,0	2,5	7,0	9,0	52,5
70	90	95	45,0	83,0	92,0	4,0	15,0	2,5	7,0	9,0	60,0
75	99	104	45,0	88,0	97,0	4,0	15,0	2,5	7,0	9,0	60,0
80	104	109	44,5	95,0	105,0	4,0	15,5	3,0	7,0	9,0	60,0
85	109	114	44,5	100,0	110,0	4,0	15,5	3,0	7,0	9,0	60,0
90	114	119	49,5	105,0	115,0	4,0	15,5	3,0	7,0	9,0	65,0
95	119	124	49,5	110,0	120,0	4,0	15,5	3,0	7,0	9,0	65,0
100	124	129	49,5	115,0	125,0	4,0	15,5	3,0	7,0	9,0	65,0

Dimensions subject to changes or modifications.

LMS14

COMPONENTS:

1 Rotating contact surface
2 Stationary contact surface
3a O-rings
3b O-rings
3c O-rings
4 Springs
5 Metal frame
5a Set screws
5b Coupling pin

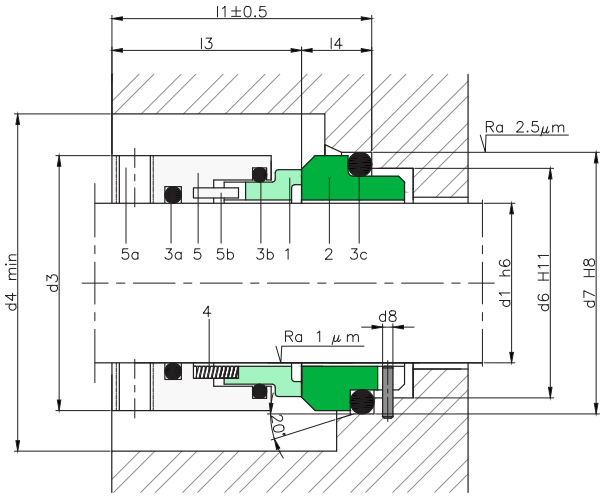

SECTORS:

CHARACTERISTICS:

- Balanced.
- System attached to the shaft by allen screws.
- Not dependent on the rotation direction.

OPERATING LIMITS:

d_1= 18 ÷ 100 mm p= 14 kg/cm²

v= 15 m/s t= -15÷ +200ºC (*)

(*) The temperature resistance depends on the material of the secondary seals used.

The operating limits are defined by the PV factor which is determined for the sealing system characteristics and those of the application.

DESCRIPTION:

The springs are not in contact with the fluid. Ideal for working with particle-laden fluids in which standard designs tend to become blocked.
Internally balanced, with no need for a stepped shaft Suitable for working in applications with high pressures. The O-ring resting on the shaft does not cause wear as there is no axial movement (changes in pressure).

DIMENSIONS CHART

Dimensions in mm

Shaft	Rotary part			Stationary part				Total length
mm	d_3	d_4	l_3	d_6	d_7	d_8	l_4	l_1
18	33	36	32	27	33	3	13.5	45.5
20	35	38	32	29	35	3	13.5	45.5
22	37	40	32	31	37	3	13.5	45.5
24	39	42	32	33	39	3	13.3	45.3
25	40	43	32	34	40	3	13.0	45.0
28	43	46	32	37	43	3	12.5	44.5
30	45	48	32	39	45	3	12.0	44.0
32	47	50	42	42	48	3	12.0	54.0
33	48	51	42	42	48	3	12.0	54.0
35	50	53	42	44	50	3	12.0	54.0
38	55	58	42	49	56	3	13.0	55.0
40	57	60	42	51	58	3	13.0	55.0
43	60	63	42	54	61	4	13.0	55.0
45	62	65	42	56	63	4	13.0	55.0
48	65	68	42	59	66	4	13.0	55.0
50	67	70	42	62	70	4	13.5	55.5
53	70	73	42	65	73	4	13.5	55.5
55	72	75	42	67	75	4	13.5	55.5
58	79	82	42	70	78	4	13.5	55.5
60	81	84	42	72	80	4	13.5	55.5
65	86	89	42	77	85	4	13.5	55.5
68	89	92	42	81	90	4	13.5	55.5
70	91	94	42	83	92	4	14.5	56.5
75	99	102	48	88	97	4	14.5	62.5
80	104	107	48	95	105	4	15.0	63.0
85	109	112	48	100	110	4	15.0	63.0
90	114	117	48	105	115	4	15.0	63.0
95	119	122	48	110	120	4	15.0	63.0
100	124	127	48	115	125	4	15.0	63.0

Dimensions subject to changes or modifications.

Dimensions in inches

Shaft		Rotary part			Stationary part			Total length
(")	mm	d_3	d_4	l_3	d_6	d_7	l_4	l_1
0,750	19,05	34	37	32	29,9	34,9	6,6	38,6
0,875	22,23	36	39	32	33,1	38,1	6,6	38,6
1,000	25,40	39	42	32	36,3	41,3	6,6	38,6
1,125	28,58	43	46	32	39,5	44,5	6,6	38,6
1,250	31,75	46	49	32	42,6	47,6	6,6	38,6
1,375	34,93	49	52	32	45,8	50,8	6,6	38,6
1,500	38,10	54	57	32	47,6	54	7,5	39,5
1,625	41,28	57	60	32	53,9	60,3	8,2	40,2
1,750	44,45	60	63	42	57,1	63,5	8,2	50,2
1,875	47,63	64	67	42	60,3	66,7	8,2	50,2
2,000	50,80	67	70	42	63,5	69,9	8,2	50,2
2,125	53,98	70	73	42	69,8	76,2	9,5	51,5
2,250	57,15	73	76	42	73	79,4	9,5	51,5
2,375	60,33	76	79	42	76,2	82,6	9,5	51,5
2,500	63,50	79	82	42	79,3	85,7	9,5	51,5
2,625	66,68	83	86	42	79,3	85,7	9,5	51,5
2,750	69,85	92	95	42	82,5	88,9	9,5	51,5
2,875	73,03	95	98	42	85,3	95,3	11,3	53,3
3,000	76,20	98	101	42	88,4	98,4	11,3	53,3
3,125	79,38	101	104	42	91,6	101,6	14,3	56,3
3,250	82,55	104	107	42	94,8	104,8	14,3	56,3
3,375	85,73	107	110	42	98	108	14,3	56,3
3,500	88,90	111	114	42	101,1	111,1	14,3	56,3
3,625	92,08	114	117	42	104,3	114,3	14,3	56,3
3,750	95,25	117	120	48	107,5	117,5	14,3	62,3
3,875	98,43	120	123	48	110,7	120,7	14,3	62,3
4,000	101,60	123	126	48	113,8	123,8	14,3	62,3

LMS15D

COMPONENTES:

1 Rotating contact surface
1a Rotating contact surface
2 Stationary contact surface
2a Stationary contact surface
3a O-rings
3b O-rings
3c O-rings
4 Springs
5 Metal frame
5a Set screws

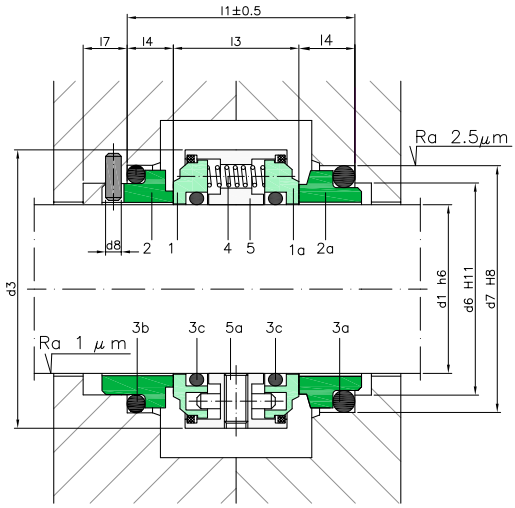

SECTORS:

CHARACTERISTICS:

- Unbalanced.
- System attached to the shaft by allen screws.
- Not dependent on the rotation direction.

OPERATING LIMITS:

d_1= 20 ÷ 100 mm p= 12 kg/cm²

v= 20 m/s t= -40÷ +200ºC (*)

(*) The temperature resistance depends on the material of the secondary seals used.

The operating limits are defined by the PV factor which is determined for the sealing system characteristics and those of the application.

DESCRIPTION:

Double seal for working with barrier fluids in which the springs are isolated from the fluid product.
API 53A and API54 assemblies.
Recommended in applications with toxic, pollutant or potentially dangerous products in which safety is an important factor.

DIMENSIONS CHART

Dimensions in mm

Shaft	Rotary part		Stationary part					Total length
mm	d_3	l_3	d_6	d_7	d_8	l_4	l_7	l_1
20	40	23	29	35	3	10	9	43
25	44,5	25	34	40	3	10	9	45
28	47,5	25	37	43	3	8,5	9	38
30	50	27	39	45	3	10	9	47
35	56	28,5	44	50	3	10	9	48,5
43	71	30	54	61	4	13	9	56
50	80	30	62	70	4	14	9	58
65	98	35	77	85	4	14	9	63
100	145	45	115	125	4	16	9	81

Dimensions subject to changes or modifications.

LMS20 / LMS20T

COMPONENTS:

1 Rotating contact surface
2 Stationary contact surface
3 O-rings
3T PTFE wedge
3a O-rings
3Ta PTFE gasket
4 Springs
5 Metal frame
5a Set screws
5b Ring

SECTORS:

CHARACTERISTICS:

- Unbalanced.
- System attached to the shaft by allen screws.
- Not dependent on the rotation direction.

OPERATING LIMITS:

d_1= 14 ÷ 100 mm p= 10 kg/cm²

v= 20 m/s t= -15÷ +200ºC (*)

(*) The temperature resistance depends on the material of the secondary seals used.

The operating limits are defined by the PV factor which is determined for the sealing system characteristics and those of the application.

DESCRIPTION:

The set of springs placed around the contact surface of the rotating part generates a more uniformed load than in models with a single spring.
The LMS20 is suitable for many different applications. Seal compliant with standard EN 12756 (KU).
The LMS20T uses a PTFE wedge as a secondary seal and is appropriate for highly aggressive chemicals and for thermal oils with high temperatures. The version in inches has a standard stationary PF. L22 part.

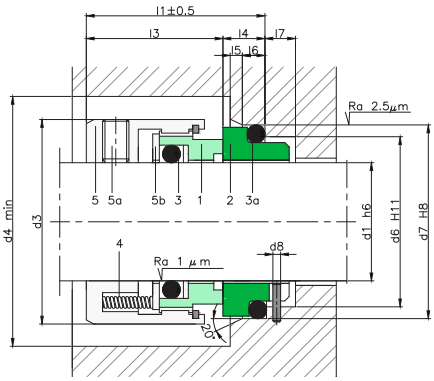

TYPE LMS20

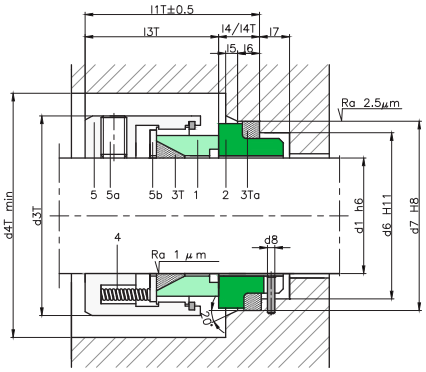

TYPE LMS20T

DIMENSIONS CHART

Dimensions in mm

Shaft	Rotary part						Stationary part							Total length	
mm	d_3	d_{3T}	d_4	d_{4T}	l_3	l_{3T}	d_6	d_7	d_8	l_4	l_5	l_6	l_7	l_1	l_{1T}
14	24	28,4	26	31	23	21	21	25	3	12	1,5	4	8,5	35	33
16	26	30,8	28	34	23	19	23	27	3	12	1,5	4	8,5	35	31
18	32	33,8	34	36,5	24	22	27	33	3	13,5	2	5	9	37,5	35,5
20	34	34,8	36	38	24	24	29	35	3	13,5	2	5	9	37,5	37,5
22	36	35,6	38	39	24	24	31	37	3	13,5	2	5	9	37,5	37,5
24	38	38,8	40	42	26,7	25	33	39	3	13,3	2	5	9	40	38,3
25	39	39,8	41	43	27	25	34	40	3	13	2	5	9	40	38
28	42	43,4	44	46	30	27	37	43	3	12,5	2	5	9	42,5	39,5
30	44	46,4	46	49	30,5	27	39	45	3	12	2	5	9	42,5	39
32	46	49,7	48	53	30,5	29	42	48	3	12	2	5	9	42,5	41
33	47	-	49	-	30,5	-	42	48	3	12	2	5	9	42,5	-
35	49	51,3	51	54	30,5	29	44	50	3	12	2	5	9	42,5	41
38	54	54,5	58	58	32	29	49	56	4	13	2	6	9	45	42
40	56	59,6	60	63	32	35	51	58	4	13	2	6	9	45	48
43	59	-	63	-	32	-	54	61	4	13	2	6	9	45	-
45	61	64,7	65	68	32	35	56	63	4	13	2	6	9	45	48
48	64	67,2	68	70	32	35	59	66	4	13	2	6	9	45	48
50	66	69,6	70	73	34	35	62	70	4	13,5	2,5	6	9	47,5	48,5
53	69	-	73	-	34	-	65	73	4	13,5	2,5	6	9	47,5	-
55	71	77,7	75	81	34	43	67	75	4	13,5	2,5	6	9	47,5	56,5
58	78	-	83	-	39	-	70	78	4	13,5	2,5	6	9	52,5	-
60	80	82,7	85	86	39	43	72	80	4	13,5	2,5	6	9	52,5	56,5
63	83	-	88	-	39	-	75	83	4	13,5	2,5	6	9	52,5	-
65	85	87,7	90	91	39	43	77	85	4	13,5	2,5	6	9	52,5	56,5
68	88	-	93	-	39	-	81	90	4	13,5	2,5	7	9	52,5	-
70	90	92,6	95	96	45,5	43	83	92	4	14,5	2,5	7	9	60	57,5
75	95	96,3	104	100	45,5	43	88	97	4	14,5	2,5	7	9	60	57,5
80	104	101,1	109	104	45	43	95	105	4	15	3	7	9	60	58
85	109	107,7	114	111	45	43	100	110	4	15	3	7	9	60	58
90	114	112,7	119	116	50	43	105	115	4	15	3	7	9	65	58
95	119	117,7	124	121	50	43	110	120	4	15	3	7	9	65	58
100	124	122,7	129	126	50	43	115	125	4	15	3	7	9	65	58

Dimensions subject to changes or modifications.

Dimensions in inches

Shaft		Rotary part						Stationary part				Total length	
(")	mm	d_3	d_{3T}	d_4	d_{4T}	l_3	l_{3T}	d_6	d_7	l_4	l_{4T}	l_1	l_{1T}
0,500	12,70	23,8	26,7	27	29	23,8	20,6	20,4	25,4	5,9	7,9	29,7	28,5
0,625	15,88	27	30,7	30,2	34	23,8	19	26,8	31,8	6,6	10,3	30,4	29,3
0,750	19,05	30,2	34	33,3	37	23,8	22,2	29,9	34,9	6,6	10,3	30,4	32,5
0,875	22,23	33,3	37,2	36,5	40	23,8	23,8	33,1	38,1	6,6	10,3	30,4	34,1
1,000	25,40	36,5	40,3	39,7	43	25,4	25,4	36,3	41,3	6,6	11,1	32	36,5
1,125	28,58	39,7	43,5	42,9	46	25,4	27	39,5	44,5	6,6	11,1	32	38,1
1,250	31,75	42,9	48,3	46	51	25,4	27	42,6	47,6	6,6	11,1	32	38,1
1,375	34,93	49,2	51,5	52,4	54	35	28,6	45,8	50,8	6,6	11,1	41,6	39,7
1,500	38,10	49,2	54,6	52,4	58	28,6	28,6	47,6	54	7,5	11,1	36,1	39,7
1,625	41,28	57,2	61	60,3	64	29,4	35	53,9	60,3	8,2	12,7	37,6	47,7
1,750	44,45	58,7	64,2	61,9	67	35	35	57,1	63,5	8,2	12,7	43,2	47,7
1,875	47,63	63,5	67,3	66,7	70	35	35	60,3	66,7	8,2	12,7	43,2	47,7
2,000	50,80	66,7	70,5	69,9	73	35	35	63,5	69,9	8,2	12,7	43,2	47,7
2,125	53,98	71,4	76,9	74,6	80	43	43	69,8	76,2	9,5	14,3	52,5	57,3
2,250	57,15	72,2	80	75,4	83	35	43	73	79,4	9,5	14,3	44,5	57,3
2,375	60,33	76,2	83,2	79,4	86	43	43	76,2	82,6	9,5	14,3	52,5	57,3
2,500	63,50	79,4	86,4	82,6	89	35	43	79,3	85,7	9,5	14,3	44,5	57,3
2,625	66,68	82,6	89,6	85,7	92	43	43	79,3	85,7	9,5	15,9	52,5	58,9
2,750	69,85	85,7	92,7	88,9	96	43	43	82,5	88,9	9,5	15,9	52,5	58,9
2,875	73,03	88,9	95,9	92,1	99	43	43	85,3	95,3	11,3	15,9	54,3	58,9
3,000	76,20	92,1	97,5	95,3	100	43	43	88,4	98,4	11,3	15,9	54,3	58,9
3,125	79,38	95,3	100,7	98,4	104	43	43	91,6	101,6	14,3	19,8	57,3	62,8
3,250	82,55	98,4	105,4	101,6	108	43	43	94,8	104,8	14,3	19,8	57,3	62,8
3,375	85,73	101,6	108,6	104,8	111	43	43	98	108	14,3	19,8	57,3	62,8
3,500	88,90	104,8	111,8	108	115	43	43	101,1	111,1	14,3	19,8	57,3	62,8
3,625	92,08	108	115	111,1	118	43	43	104,3	114,3	14,3	19,8	57,3	62,8
3,750	95,25	111,1	118,1	114,3	121	43	43	107,5	117,5	14,3	19,8	57,3	62,8
3,875	98,43	114,3	121,3	117,5	124	43	43	110,7	120,7	14,3	19,8	57,3	62,8
4,000	101,60	117,5	124,5	120,7	127	43	43	113,8	123,8	14,3	19,8	57,3	62,8

Lidering SAFE INDUSTRY

LMS20B / LMS20BT

COMPONENTS:

1 Rotating contact surface
2 Stationary contact surface
3 O-rings
3T PTFE wedge
3a O-rings
3Ta PTFE gasket
4 Springs
5 Metal frame
5a Set screws
5b Ring

SECTORS:

CHARACTERISTICS:

- Balanced.
- System attached to the shaft by allen screws.
- Not dependent on the rotation direction.

OPERATING LIMITS:

d_1= 14 ÷ 100 mm p= 60 kg/cm²

v= 25 m/s t= -15÷ +200ºC (*)

(*) The temperature resistance depends on the material of the secondary seals used.

The operating limits are defined by the PV factor which is determined for the sealing system characteristics and those of the application.

DESCRIPTION:

The balanced contact surface design allows the mechanical seal to be used in applications with high pressures without suffering premature wear.
The set of springs placed around the contact surface of the rotating part generates a more uniformed load than in models with a single spring.
It can be supplied with PTFE wedge for highly aggressive chemicals with high temperatures.
Seal compliant with standard EN 12756 (KB).

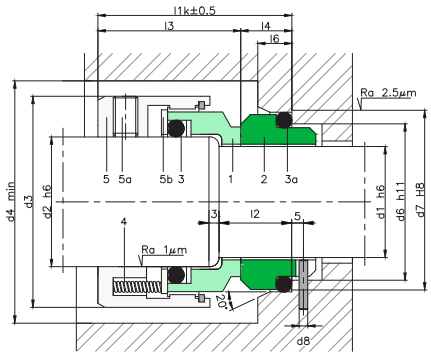

TYPE LMS20B

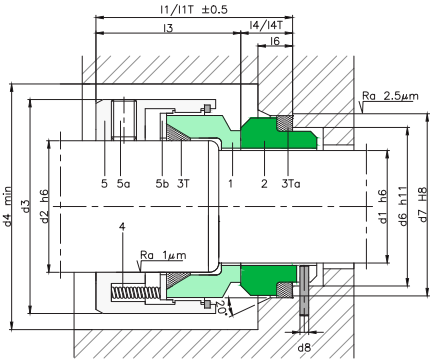

TYPE LMS20BT

DIMENSIONS CHART

Dimensions in mm

Shaft	Rotary part				Stationary part							Total length
mm	d_2	d_3	d_4	l_3	d_6	d_7	d_8	l_2	l_4/ l_{4T}	l_6	l_7	l_1/ l_{1T}
14	18	32	34	30,5	21	25	3	18	12	5,5	8,5	42,5
16	20	34	36	30,5	23	27	3	18	12	5,5	8,5	42,5
18	22	36	38	31,5	27	33	3	20	13,5	7	9	45
20	24	38	40	31,5	29	35	3	20	13,5	7	9	45
22	26	40	42	31,5	31	37	3	20	13,5	7	9	45
24	28	42	44	34,2	33	39	3	20	13,3	7	9	47,5
25	30	44	46	34,5	34	40	3	20	13	7	9	47,5
28	33	47	49	37,5	37	43	3	20	12,5	7	9	50
30	35	49	51	38	39	45	3	20	12	7	9	50
32	38	54	58	38	42	48	3	20	12	7	9	50
33	38	54	58	38	42	48	3	23	12	7	9	50
35	40	56	60	38	44	50	3	23	12	7	9	50
38	43	59	63	39,5	49	56	4	23	13	8	9	52,5
40	45	61	65	39,5	51	58	4	23	13	8	9	52,5
43	48	64	68	39,5	54	61	4	23	13	8	9	52,5
45	50	66	70	39,5	56	63	4	23	13	8	9	52,5
48	53	69	73	39,5	59	66	4	23	13	8	9	52,5
50	55	71	75	44	62	70	4	25	13,5	8,5	9	57,5
53	58	78	83	44	65	73	4	25	13,5	8,5	9	57,5
55	60	80	85	44	67	75	4	25	13,5	8,5	9	57,5
58	63	83	88	49	70	78	4	25	13,5	8,5	9	62,5
60	65	85	90	49	72	80	4	25	13,5	8,5	9	62,5
65	70	90	95	49	77	85	4	25	13,5	8,5	9	62,5
70	75	95	104	55,5	83	92	4	28	14,5	9,5	9	70
75	80	104	109	55,5	88	97	4	28	14,5	9,5	9	70
80	85	109	114	55	95	105	4	28	15	10	9	70
85	90	114	119	60	100	110	4	28	15	10	9	75
90	95	119	124	60	105	115	4	28	15	10	9	75
95	100	124	129	60	110	120	4	28	15	10	9	75
100	105	129	134	60	115	125	4	28	15	10	9	75

Dimensions subject to changes or modifications.

Dimensions in inches

Shaft		Rotary part					Stationary part				Total length	
(")	mm	d_2 (")	d_2 mm	d_3	d_4	l_3	d_6	d_7	l_4	l_{4T}	l_1	l_{1T}
0,875	22,23	1,000	25,40	39,67	41,67	33,32	36,3	41,3	6,6	11,1	39,92	44,42
1,000	25,40	1,125	28,58	42,85	44,85	34,93	39,5	44,5	6,6	11,1	41,53	46,03
1,125	28,58	1,250	31,75	47,63	35,75	34,93	42,6	47,6	6,6	11,1	41,53	46,03
1,125	28,58	1,375	34,93	50,8	38,93	36,5	45,8	50,8	6,6	11,1	43,1	47,6
1,250	31,75	1,500	38,10	53,98	42,10	36,5	47,6	54	7,5	11,1	44	47,6
1,375	34,93	1,625	41,28	60,33	45,28	44,45	53,9	60,3	8,2	12,7	52,65	57,15
1,500	38,10	1,750	44,45	63,5	48,45	44,45	57,1	63,5	8,2	12,7	52,65	57,15
1,625	41,28	1,875	47,63	66,68	51,63	44,45	60,3	66,7	8,2	12,7	52,65	57,15
1,750	44,45	2,000	50,80	69,85	54,80	44,45	63,5	69,9	8,2	12,7	52,65	57,15
1,875	47,63	2,125	53,98	76,2	58,98	52,37	69,8	76,2	9,5	14,3	61,87	66,67
2,000	50,80	2,250	57,15	79,38	62,15	52,37	73	79,4	9,5	14,3	61,87	66,67
2,125	53,98	2,375	60,33	82,55	65,33	52,37	76,2	82,6	9,5	14,3	61,87	66,67
2,250	57,15	2,500	63,50	85,73	68,50	52,37	79,3	85,7	9,5	14,3	61,87	66,67
2,375	60,33	2,625	66,68	88,9	71,68	52,37	79,3	85,7	9,5	15,9	61,87	68,27
2,500	63,50	2,750	69,85	92,08	74,85	52,37	82,5	88,9	9,5	15,9	61,87	68,27
2,625	66,68	2,875	73,03	95,25	78,03	52,37	85,3	95,3	11,3	15,9	63,67	68,27
2,750	69,85	3,000	76,20	96,82	81,20	52,37	88,4	98,4	11,3	15,9	63,67	68,27
2,875	73,03	3,125	79,38	100	84,38	52,37	91,6	101,6	14,3	19,8	66,67	72,17
3,000	76,20	3,250	82,55	104,78	87,55	52,37	94,8	104,8	14,3	19,8	66,67	72,17
3,125	79,38	3,375	85,73	107,95	90,73	52,37	98	108	14,3	19,8	66,67	72,17
3,250	82,55	3,500	88,90	111,13	93,90	52,37	101,1	111,1	14,3	19,8	66,67	72,17
3,375	85,73	3,625	92,08	114,3	97,08	52,37	104,3	114,3	14,3	19,8	66,67	72,17
3,500	88,90	3,750	95,25	117,48	100,25	52,37	107,5	117,5	14,3	19,8	66,67	72,17
3,625	92,08	3,875	98,43	120,65	103,43	52,37	110,7	120,7	14,3	19,8	66,67	72,17
3,750	95,25	4,000	101,60	123,83	106,60	52,37	113,8	123,8	14,3	19,8	66,67	72,17

LMS22

COMPONENTS:

1 Rotating contact surface
3a O-rings
4 Springs
5 Metal frame
5a Set screws

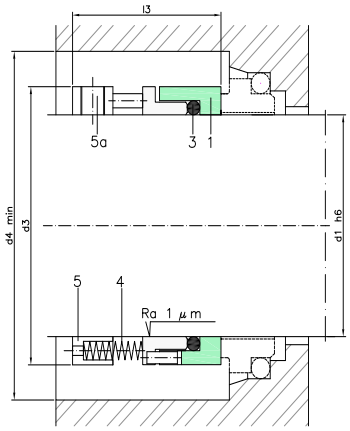

SECTORS:

CHARACTERISTICS:

- Unbalanced.
- System attached to the shaft by allen screws.
- Not dependent on the rotation direction

OPERATING LIMITS:

d_1= 20 ÷ 100 mm p= 12 kg/cm²

v= 20 m/s t= -40 ÷ +200ºC (*)

(*) The temperature resistance depends on the material of the secondary seals used.

The operating limits are defined by the PV factor which is determined for the sealing system characteristics and those of the application.

DESCRIPTION:

The contact surface of the rotating part can be detached, which makes this model extremely versatile as it is easy to exchange contact surfaces made of different materials.

DIMENSIONS CHART

Dimensions in mm

Shaft	Rotary part		
mm	d_3	d_4	l_3
20	34	39	35
22	36	41	35
24	38	43	35
25	39	44	35
28	42	47	35
30	44	49	35
32	46	51	35
33	47	52	35
35	49	54	35
38	54	59	38
40	56	61	38
43	59	64	38
45	61	66	38
48	64	69	38
50	66	71	39
53	69	74	40
55	71	76	40
58	76	81	41
60	78	83	41
63	81	86	41
65	83	88	41
68	86	91	41
70	90	95	42
75	95	100	42
80	100	105	42
85	105	110	43
90	110	115	45
95	115	120	45
100	120	125	45

Dimensions subject to changes or modifications.

Dimensions in inches

Shaft		Rotary part		
(")	mm	d_3	d_4	l_3
1,00	25,40	39,70	44,70	41,28
1,13	28,58	42,85	47,85	41,28
1,19	30,15	44,45	49,45	41,28
1,25	31,75	46,02	51,02	41,28
1,38	34,93	49,20	54,20	41,28
1,44	36,50	50,80	55,80	41,28
1,50	38,10	52,37	57,37	41,28
1,63	41,28	58,72	63,72	44,45
1,75	44,45	60,33	65,33	44,45
1,88	47,63	65,07	70,07	44,45
2,00	50,80	68,25	73,25	44,45
2,13	53,98	71,42	76,42	44,45
2,25	57,15	74,60	79,60	44,45
2,38	60,33	77,77	82,77	44,45
2,50	63,50	80,95	85,95	44,45
2,63	66,68	84,12	89,12	44,45
2,75	69,85	87,30	92,30	44,45
2,88	73,03	90,47	95,47	44,45
3,00	76,20	93,65	98,65	44,45
3,13	79,38	101,60	106,60	44,45
3,25	82,55	104,78	109,78	44,45
3,38	85,73	107,95	112,95	44,45
3,50	88,90	111,13	116,13	44,45
3,63	92,08	114,30	119,30	44,45
3,75	95,25	117,48	122,48	46,02
3,88	98,43	120,65	125,65	46,02
4,00	101,60	123,83	128,83	46,02
4,25	107,95	130,18	135,18	52,37
4,50	114,30	136,53	141,53	52,37

LMS26

COMPONENTS:

1 Rotating contact surface
2 Stationary contact surface
3a O-ring
4 Spring
5 Metal frame
6 Ring
7 Metal frame
8 Setting clips

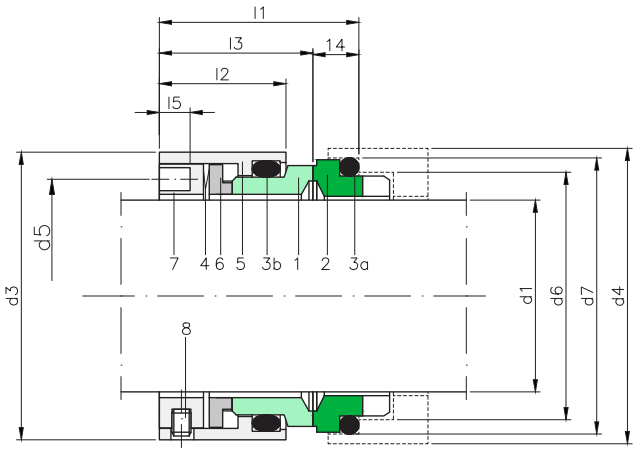

SECTORS:

CHARACTERISTICS:

- Equilibrado.
- Sistema rotación independiente
- Multimuelle
- External mounting.

OPERATING LIMITS:

p= 50 kg/cm² v= 50 m/s

t= -20÷ +140ºC (*)

(*) The temperature resistance depends on the material of the secondary seals used.

The operating limits are defined by the PV factor which is determined for the sealing system characteristics and those of the application.

DESCRIPTION:

Balanced mechanical seal with protected springs to prevent them from blocking when in contact with sticky or viscous fluids. The O-ring on the shaft is static, thereby preventing "fretting" of the shaft.

DIMENSIONS CHART

Dimensions in mm

Shaft					Rotary part					
mm	d_3	d_4	d_5	d_6	d_7	l_1	l_2	l_3	l_4	l_5
40	65	64	52	53.5	59	48.5	30	39	9.5	5
50	75	77	61	63.5	72	54.5	33	42.2	12.3	5
53	80	80	64	66.5	75	55	33.5	42.7	12.3	5
55	85	85	68	71.5	80	60	36.5	47.2	12.8	5
60	90	90	74	76.5	85	61.5	38	48.7	12.8	5
65	95	95	78	81.5	90	62	38	49.2	12.8	5
80	115	119	98	102	110.5	63.5	38	50	13.5	5

Dimensions subject to changes or modifications.

LMS27

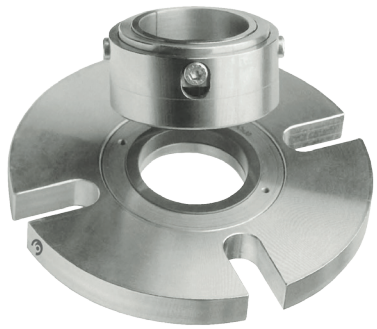

COMPONENTS:

1 Rotating contact surface
2 Stationary contact surface
3 O-rings
4 Springs
5 Metal frame
6 Sleeve
7 Flange

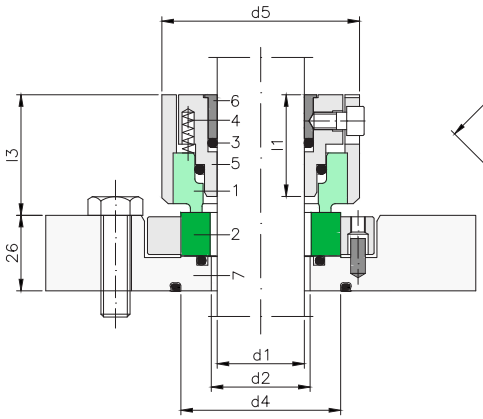

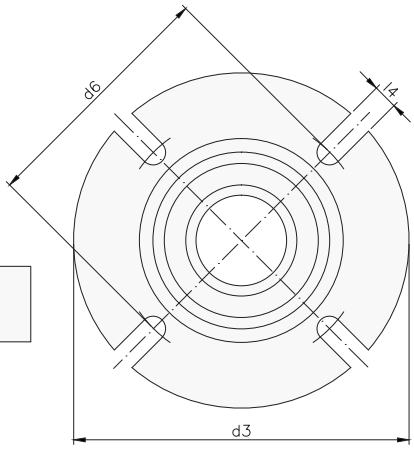

SECTORS:

CHARACTERISTICS:

- Balanced.
- System attached to the shaft by allen screws.
- Not dependent on the rotation direction.
- External mounting.

OPERATING LIMITS:

d_1= 25 ÷ 160 mm p= vacio 6 kg/cm²

v= 2 m/s t= -20÷ +150ºC (*)

(*) The temperature resistance depends on the material of the secondary seals used.

The operating limits are defined by the PV factor which is determined for the sealing system characteristics and those of the application.

DESCRIPTION:

A multi-spring mechanical seal recommended for vertical stirrers with moderate speeds. The fixed part may have cooling/lubrication systems: flush and/or cooled flange connection.

DIMENSIONS CHART

Dimensions in mm

Shaft		Rotary part				Stationary part				
(")	mm	l_1	l_3	d_5	d_2	d_3	d_4	d_6 min	d_6 max	l_4
1,00	25	40,5	41,5	68	34	148	-	100	132	11
1,125	28	40,5	41,5	68	34	148	55	100	132	11
-	30	40,5	41,5	68	34	148	55	100	132	11
1,250	32	40,5	41,5	73	39	153	60	105	137	11
1,375	35	40,5	41,5	73	39	153	60	105	137	11
1,500	38	40,5	41,5	78	44	158	65	110	142	11
-	40	40,5	41,5	78	44	158	65	110	142	11
1,625	45	40,5	41,5	83	49	163	68	115	152	11
1,750	-	40,5	41,5	83	49	163	68	115	152	11
1,875	48	40,5	41,5	88	54	178	73	125	160	14
1,125	50	40,5	41,5	88	54	178	73	125	160	14
2,000	55	40,5	41,5	93	59	183	78	130	165	14
2,125	-	40,5	41,5	93	59	183	78	130	165	14
2,250	60	40,5	41,5	98	64	188	85	135	170	14
2,375	65	40,5	44,5	103	69	193	90	140	175	14
2,500	-	40,5	44,5	103	69	193	90	140	175	14
6,625	70	43,5	44,5	108	74	198	95	145	180	14
2,750	-	43,5	44,5	108	74	198	95	145	180	14
2.875	75	43,5	44,5	113	79	203	100	150	185	14

Shaft		Rotary part			Stationary part					
(")	mm	l_1	l_3	d_5	d_2	d_3	d_4	d_6 min	d_6 max	l_4
3,000	80	43,5	44,5	118	84	208	105	155	190	14
3,250	85	43,5	44,5	123	89	213	110	160	195	14
3,500	90	43,5	44,5	128	94	218	115	165	200	14
3,750	95	43,5	44,5	133	99	223	120	170	205	14
	100	43,5	44,5	138	104	228	125	175	210	14
4,000	105	43,5	44,5	143	109	233	130	180	215	14
4,250	110	43,5	44,5	148	114	238	135	185	220	14
4,500	115	43,5	44,5	153	119	267	140	196	243	18
4,750	125	43,5	44,5	163	129	277	150	206	253	18
5,000	140	43,5	44,5	178	144	297	165	221	273	18
5,250	-	43,5	44,5	178	144	297	165	221	273	18
5,500	-	43,5	44,5	178	144	297	165	221	273	18
5,750	150	43,5	44,5	188	154	307	175	231	283	18
6,000	160	43,5	44,5	198	164	317	185	241	283	18
6,250	-	43,5	44,5	198	164	317	185	241	293	18

Dimensions subject to changes or modifications.

LMS28

COMPONENTS:

1 Rotating contact surface
2 Stationary contact surface
3 O-rings
3a O-rings
4 Springs
5 Metal frame
5a Set screws

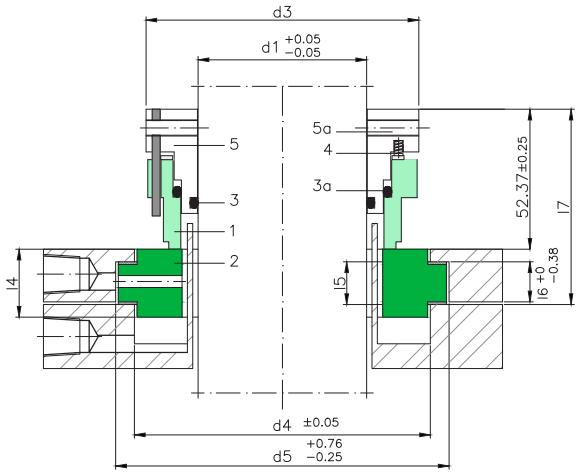

SECTORS:

CHARACTERISTICS:

- Balanced.
- System attached to the shaft by allen screws.
- Not dependent on the rotation direction.
- External mounting.

OPERATING LIMITS:

d_1= 25 ÷ 175 mm p= 15 kg/cm²

v= 2 m/s t= -20÷ +200ºC (*)

(*) The temperature resistance depends on the material of the secondary seals used.

The operating limits are defined by the PV factor which is determined for the sealing system characteristics and those of the application.

DESCRIPTION:

It can be used in vertical agitators with moderate speeds without the need to apply auxiliary lubrication systems. Adapted to DEBRIS cleaning systems.

DIMENSIONS CHART

Dimensions in mm

Shaft	Rotary part	Stationary part					
mm	d_3	d_4	d_5	l_4	l_5	l_6	l_7
25	63,5	47,6	57,9	20,6	12,7	11,9	69,0
28	66,6	50,8	61,1	20,6	12,7	11,9	69,0
30	69,8	53,9	67,5	22,2	12,7	11,9	69,0
32	69,8	53,9	67,5	22,2	12,7	11,9	69,0
33	73,0	57,1	70,6	22,2	12,7	11,9	69,0
35	73,0	57,1	70,6	22,2	12,7	11,9	69,0
38	76,2	63,5	77,0	22,2	12,7	11,9	69,0
40	79,3	66,6	80,2	22,2	12,7	11,9	69,0
43	82,5	69,8	83,3	22,2	12,7	11,9	69,0
45	85,7	73,0	89,7	25,4	15,9	15,1	73,0
50	88,9	79,3	96,0	25,4	15,9	15,1	73,0
53	92,0	79,3	99,2	25,4	15,9	15,1	73,0
55	95,2	85,7	102,4	25,4	15,9	15,1	73,0
58	98,4	88,9	105,6	25,4	15,9	15,1	73,0
60	98,4	88,9	105,6	25,4	15,9	15,1	73,0
63	101,6	92,0	108,7	25,4	15,9	15,1	73,0
65	104,7	95,2	111,9	25,4	15,9	15,1	73,0
68	107,9	98,4	115,1	25,4	15,9	15,1	73,0
70	107,9	98,4	115,1	25,4	15,9	15,1	73,0
75	114,3	103,3	119,8	25,4	15,9	15,1	73,0
80	120,6	111,1	127,8	25,4	15,9	15,1	73,0
85	123,9	114,3	131,1	25,4	15,9	15,1	73,0
90	130,2	120,7	137,3	25,4	15,9	15,1	73,0
95	133,3	123,8	140,5	25,4	15,9	15,1	73,0
100	139,7	133,3	150,0	25,4	15,9	15,1	73,0
105	142,9	136,5	153,2	25,4	15,9	15,1	73,0
110	149,2	142,8	159,5	25,4	15,9	15,1	73,0
115	155,5	149,2	165,9	25,4	15,9	15,1	73,0

Dimensions subject to changes or modifications.

Dimensions in inches

Shaft		Rotary part	Stationary part					
(")	mm	d_3	d_4	d_5	l_4	l_5	l_6	l_7
1.00	25.40	63.50	47.63	57.94	20.62	12.70	11.89	69.04
1.13	28.58	66.68	50.80	61.11	20.62	12.70	11.89	69.04
1.25	31.75	69.85	53.98	67.46	20.62	12.70	11.89	69.85
1.38	34.93	73.03	57.15	70.64	20.62	12.70	11.89	69.85
1.50	38.10	76.20	63.50	76.99	20.62	12.70	11.89	69.85
1.63	41.28	79.38	66.68	80.16	20.62	12.70	11.89	69.85
1.75	44.45	82.55	69.85	83.34	20.62	12.70	11.89	73.03
1.88	47.63	85.73	73.03	89.69	25.40	15.88	11.89	73.03
2.00	50.80	88.90	79.38	98.32	25.40	15.88	11.89	73.03
2.13	53.98	92.08	79.38	99.21	25.40	15.88	15.06	73.03
2.25	57.15	95.25	85.73	102.39	25.40	15.88	15.06	73.03
2.38	60.33	98.43	88.90	105.56	25.40	15.88	15.06	73.03
2.50	63.50	101.60	92.08	108.74	25.40	15.88	15.06	73.03
2.63	66.68	104.78	95.25	111.91	25.40	15.88	15.06	73.03
2.75	69.85	107.95	98.43	115.09	25.40	15.88	15.06	73.03
2.88	73.03	111.13	101.60	118.26	25.40	15.88	15.06	73.03
3.00	76.20	114.30	104.78	119.84	25.40	15.88	15.06	73.03
3.13	79.38	117.48	107.95	124.61	25.40	15.88	15.06	73.03
3.25	82.55	120.65	111.13	127.79	25.40	15.88	15.06	73.03
3.38	85.73	123.83	114.30	130.96	25.40	15.88	15.06	73.03
3.50	88.90	127.00	117.48	134.14	25.40	15.88	15.06	73.03
3.63	92.08	130.18	120.65	137.31	25.40	15.88	15.06	73.03
3.75	95.25	133.35	123.83	140.49	25.40	15.88	15.06	73.03
3.88	98.43	136.53	127.00	143.66	25.40	15.88	15.06	73.03
4.00	101.60	139.70	130.18	150.01	25.40	15.88	15.06	73.03
4.13	104.78	142.88	133.35	153.19	25.40	15.88	15.06	73.03
4.25	107.95	146.05	136.53	156.36	25.40	15.88	15.06	73.03
4.38	111.13	149.23	139.70	159.54	25.40	15.88	15.06	73.03
4.50	114.30	152.40	142.88	162.71	25.40	15.88	15.06	73.03

LMS29

COMPONENTS:

1 Rotating contact surface
2 Stationary contact surface
3a O-rings
3b O-rings
3c O-rings
3d O-rings
4 Springs
5 Metal frame
5a Set screws

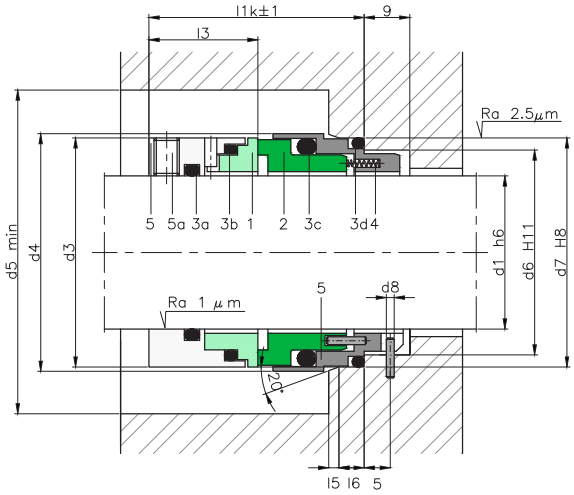

SECTORS:

CHARACTERISTICS:

- Balanced.
- System attached to the shaft by allen screws
- Not dependent on the rotation direction.

OPERATING LIMITS:

d_1= 18 ÷ 100 mm p= 25 kg/cm²

v= 20 m/s t= -15÷ +200ºC (*)

(*) The temperature resistance depends on the material of the secondary seals used.

The operating limits are defined by the PV factor which is determined for the sealing system characteristics and those of the application.

DESCRIPTION:

The fact that the springs are not in contact with the fluid makes this mechanical seal perfect for working with particle-laden fluids, as it prevents them from becoming blocked or obstructed.
Its structure and design makes it ideal for vacuum operations without having to use a retaining ring. It can be used with a single, tandem-mounted (API52) or back-to back (API53) mounting system. The O-ring resting on the shaft is not affected by any axial movement (changes in pressure) and therefore produces no wear on the surface of the shaft. Seal compliant with standard EN 12756 (KU).

DIMENSIONS CHART

Dimensions in mm

Shaft	Rotary part				Stationary part					Total length
mm	d_3	d_4	l_3	d_5	d_6	d_7	d_8	l_5	l_6	l_{1k}
18	33	34.7	19.5	39.7	27	33	3	2.0	5	37.5
20	35	36.7	19.5	41.7	29	35	3	2.0	5	37.5
22	37	38.7	19.5	43.7	31	37	3	2.0	5	37.5
24	39	40.7	20.5	45.7	33	39	3	2.0	5	40.0
25	40	41.7	20.5	46.7	34	40	3	2.0	5	40.0
28	43	44.7	21.5	49.7	37	43	3	2.0	5	42.5
30	45	46.7	21.5	51.7	39	45	3	2.0	5	42.5
32	48	49.7	21.5	54.7	42	48	3	2.0	5	42.5
33	48	49.7	21.5	54.7	42	48	3	2.0	5	42.5
35	50	51.7	21.5	56.7	44	50	3	2.0	5	42.5
38	56	57.7	24.0	62.7	49	56	4	2.0	5	45.0
40	58	59.7	24.0	64.7	51	58	4	2.0	5	45.0
43	61	62.7	24.0	67.7	54	61	4	2.0	5	45.0
45	63	64.7	24.0	69.7	56	63	4	2.0	5	45.0
48	66	67.7	24.0	72.7	59	66	4	2.0	5	45.0
50	70	71.7	25.0	76.7	62	70	4	2.5	6	47.5
53	73	74.7	25.0	79.7	65	73	4	2.5	6	47.5
55	75	76.7	25.0	81.7	67	75	4	2.5	6	47.5
58	78	80.5	28.0	85.5	70	78	4	2.5	6	52.5
60	80	82.5	28.0	87.5	72	80	4	2.5	6	52.5
63	83	85.5	28.0	90.5	75	83	4	2.5	6	52.5
65	85	87.5	28.0	92.5	77	85	4	2.5	6	52.5
68	90	92.5	28.0	97.5	81	90	4	2.5	7	52.5
70	92	94.5	34.0	99.5	83	92	4	2.5	7	60.0
75	97	100.5	34.0	105.5	88	97	4	2.5	7	60.0
80	105	108.5	34.0	113.5	95	105	4	3.0	7	60.0
85	110	113.5	34.0	118.5	100	110	4	3.0	7	60.0
90	115	118.5	39.0	123.5	105	115	4	3.0	7	65.0
95	120	123.5	39.0	128.5	110	120	4	3.0	7	65.0
100	125	128.5	39.0	133.5	115	125	4	3.0	7	65.0

Dimensions subject to changes or modifications.